19.Transmission Case

A: REMOVAL

1) Remove the manual transmission assembly from the vehicle. <Ref. to 6MT-34, REMOVAL, Manual Transmission Assembly.>
2) Prepare the transmission for overhaul. <Ref. to 6MT-39, Preparation for Overhaul.>
3) Remove the oil pipe, neutral position switch, back-up light switch and harness. <Ref. to 6MT-41, REMOVAL, Oil Pipe.> <Ref. to 6MT-43, REMOVAL, Neutral Position Switch.> <Ref. to 6MT-42, REMOVAL, Back-up Light Switch.>
4) Remove the extension case. <Ref. to 6MT-44, REMOVAL, Extension Case.>
5) Remove the transfer driven gear. <Ref. to 6MT-56, REMOVAL, Transfer Driven Gear.>
6) Remove the center differential. <Ref. to 6MT-58, REMOVAL, Center Differential.>
7) Remove the oil pump. <Ref. to 6MT-59, REMOVAL, Oil Pump.>
8) Remove the driven gear assembly shim and spacer.

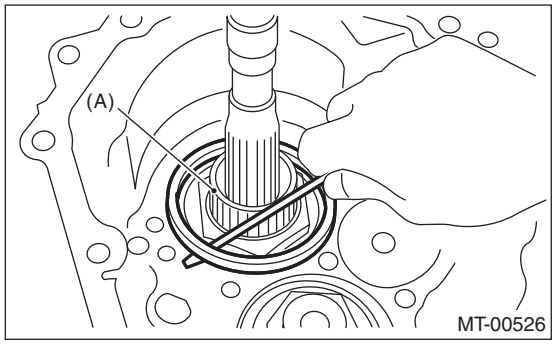

(A) Driven gear ASSY

9) Remove the snap ring.

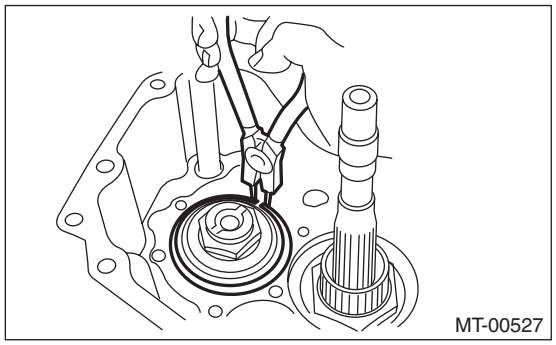

10) Remove the pilot bolt.

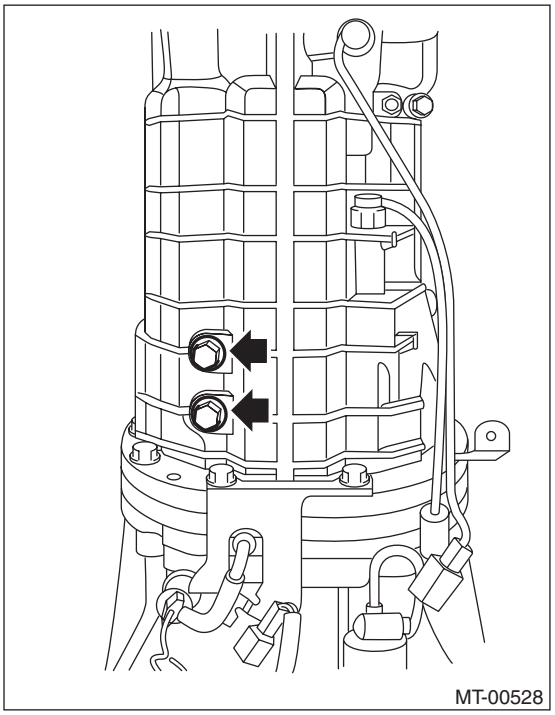

11) Remove the holder reverse bolt.

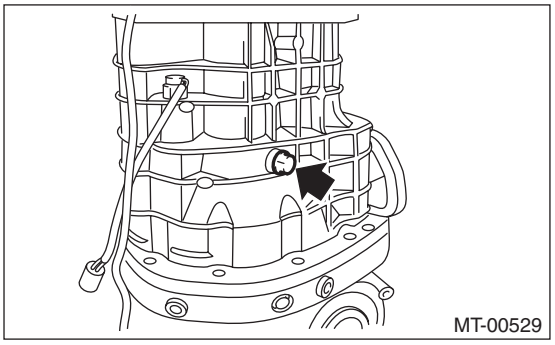

12) Remove the transmission case.

NOTE:
If the oil guide is caught between the shift fork, it may be difficult to remove the transmission case. Move the oil guide and oil pipe, then remove. Do not pull on the transmission case with excessive force.

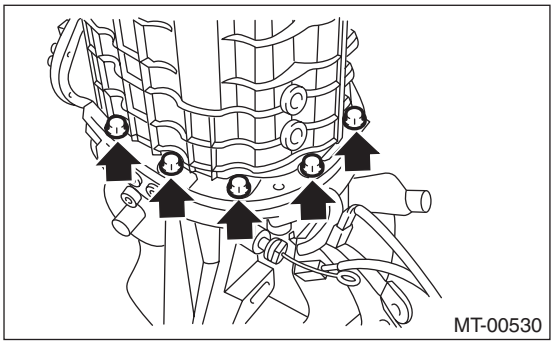

13) Remove any remaining liquid gasket from the transmission case and adapter plate.

B: INSTALLATION

1) Check that the shifter fork and the interlock block are both shifted into the neutral position. If they are not, shift into the neutral position.

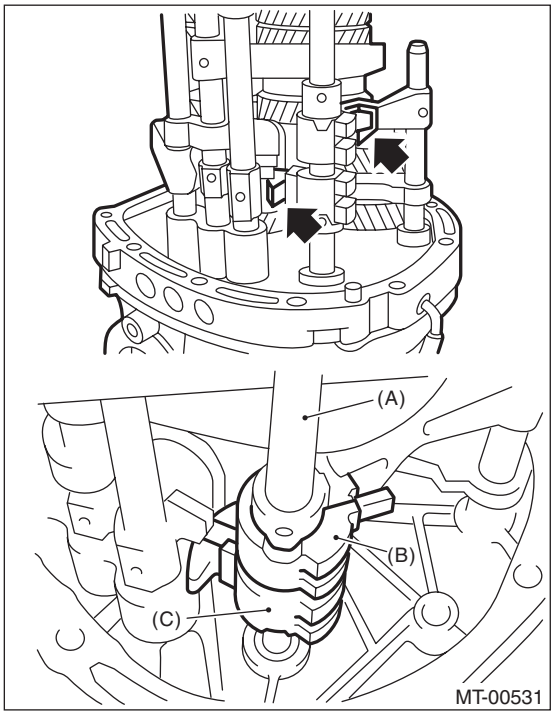

(A) Striking rod
(B) Reverse interlock block
(C) Interlock block

2) Apply liquid gasket to the adapter plate.

Liquid gasket:
THREE BOND 1215 (Part No. 004403007)

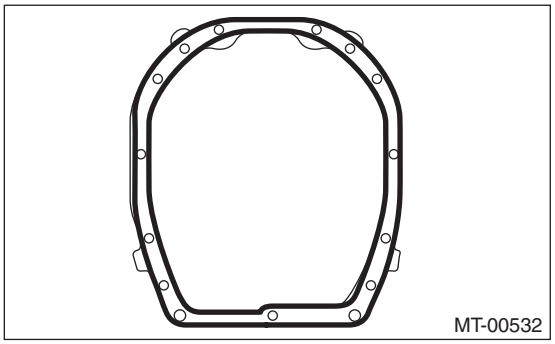

3) Install the transmission case.

4) By inspecting from the pilot bolt attachment hole, check that the interlock block and the reverse interlock block aligned in the neutral position. If not aligned in neutral, remove the transmission case, and shift the shifter fork and interlock block to the neutral position.

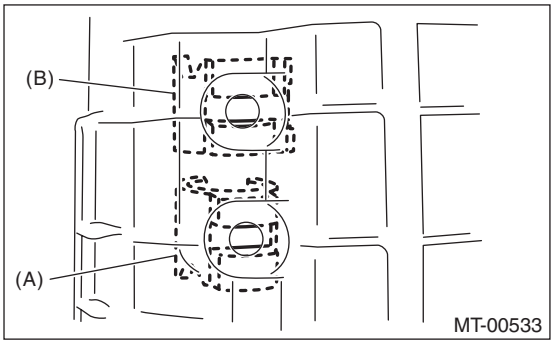

(A) Interlock block
(B) Reverse interlock block

5) Temporarily attach the pilot bolt with a new gasket.
6) Affix the transmission case with the bolts and nuts.

Tightening torque:
50 N·m (5.1 kgf-m, 36.9 ft-lb)

7) Tighten the pilot bolt.

Tightening torque:
34 N·m (3.5 kgf-m, 25.1 ft-lb)

8) Tighten the holder reverse bolt.

Tightening torque:
25 N·m (2.5 kgf-m, 18.1 ft-lb)

9) Install the snap ring, washer and collar of the driven gear assembly.

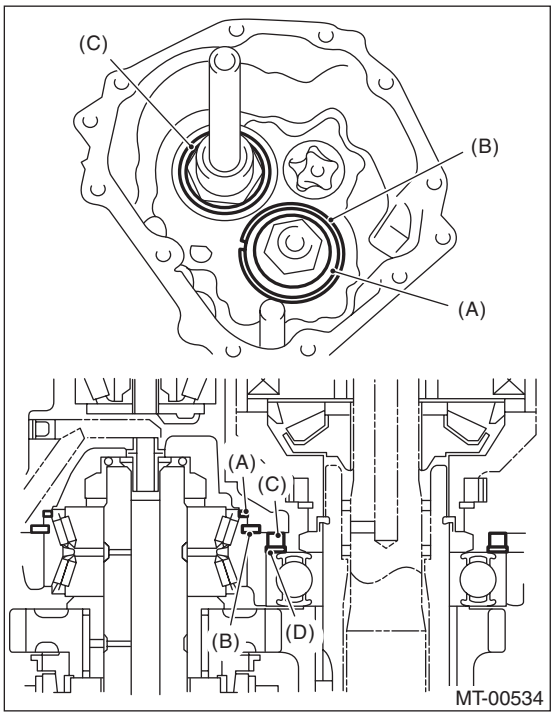

(A) Washer
(B) Snap ring
(C) Collar
(D) Washer

10) Install the oil pump. <Ref. to 6MT-61, INSTALLATION, Oil Pump.>
11) Install the center differential. <Ref. to 6MT-58, INSTALLATION, Center Differential.>
12) Install the transfer driven gear. <Ref. to 6MT-56, INSTALLATION, Transfer Driven Gear.>
13) Install the extension case. <Ref. to 6MT-44, INSTALLATION, Extension Case.>
14) Install the oil pipe, neutral position switch, back-up light switch and harness. <Ref. to 6MT-41, INSTALLATION, Oil Pipe.> <Ref. to 6MT-43, INSTALLATION, Neutral Position Switch.> <Ref. to 6MT-42, INSTALLATION, Back-up Light Switch.>
15) Install the manual transmission assembly to the vehicle. <Ref. to 6MT-36, INSTALLATION, Manual Transmission Assembly.>

C: DISASSEMBLY

1) Remove the oil pipe and oil guide.

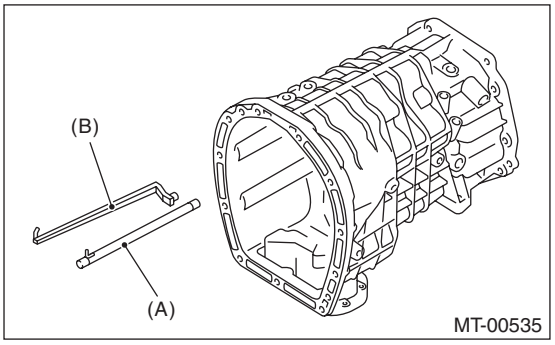

(A) Oil pipe
(B) Oil guide

2) Remove the bolt, O-ring, relief spring and relief valve.

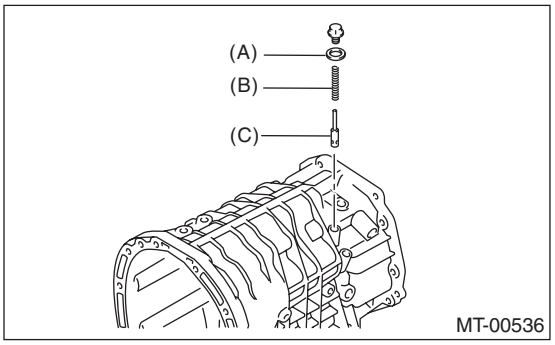

(A) O-ring
(B) Relief valve spring
(C) Relief valve

3) Remove the bolt, O-ring, valve spring and ball.

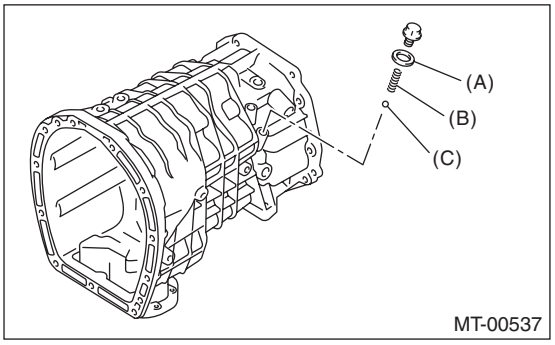

(A) O-ring
(B) Valve spring
(C) Ball

4) Remove the harness bracket.

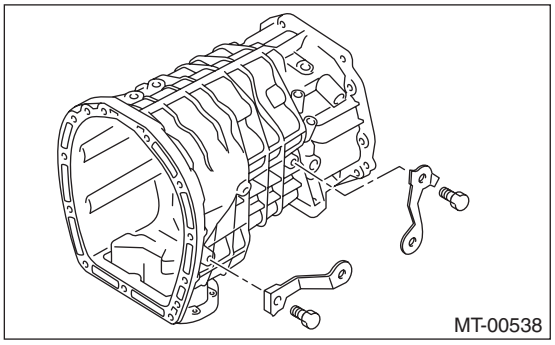

5) Remove the oil pan.

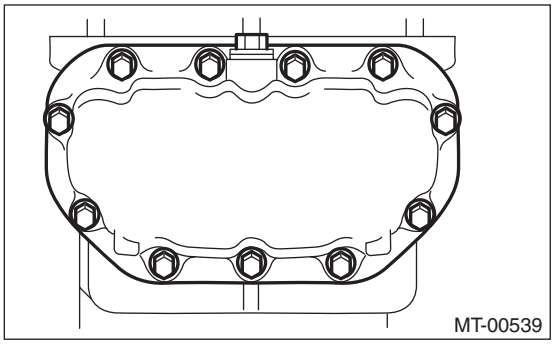

6) Remove any remaining liquid gasket from the transmission case and oil pan.
7) Remove the oil pan magnet, and remove the oil strainer.

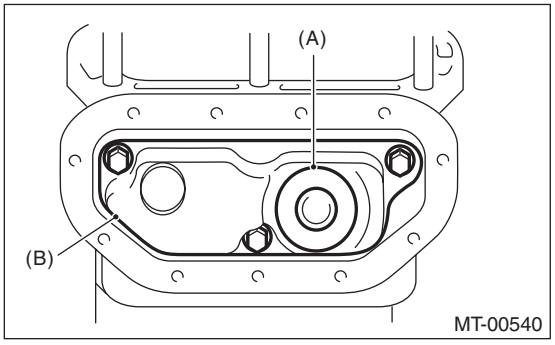

(A) Oil pan magnet
(B) Oil strainer

D: ASSEMBLY

1) Install the oil strainer and magnet.

Tightening torque:
10 N·m (1.0 kgf-m, 7.4 ft-lb)

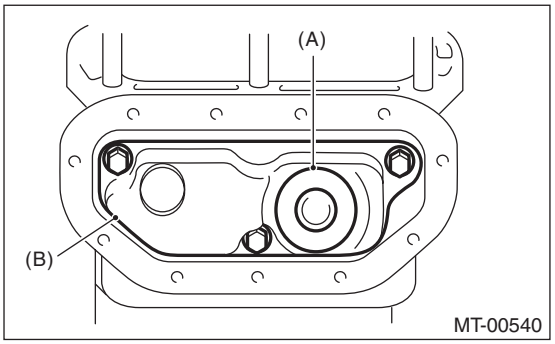

(A) Oil pan magnet
(B) Oil strainer

2) Apply liquid gasket to the oil pan.

Liquid gasket:
THREE BOND 1215 (Part No. 004403007)

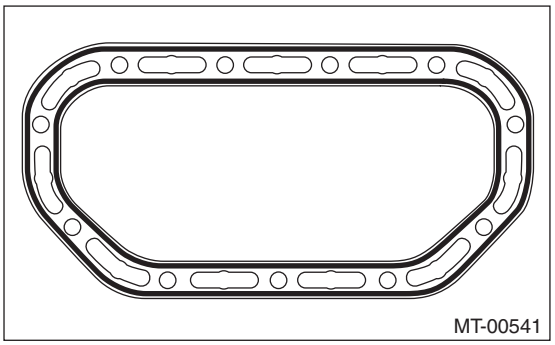

3) Install the oil pan.

Tightening torque:
6.4 N·m (0.65 kgf-m, 4.7 ft-lb)

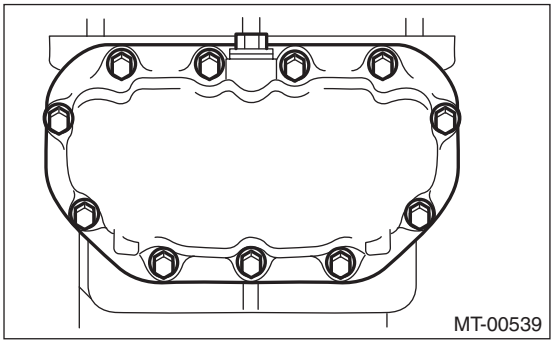

4) Install the relief valve, relief valve spring and a new O-ring.

5) Install the ball, valve spring and a new O-ring.

Tightening torque:
T1: 13 N·m (1.3 kgf-m, 9.6 ft-lb)
T2: 16 N·m (1.6 kgf-m, 11.8 ft-lb)

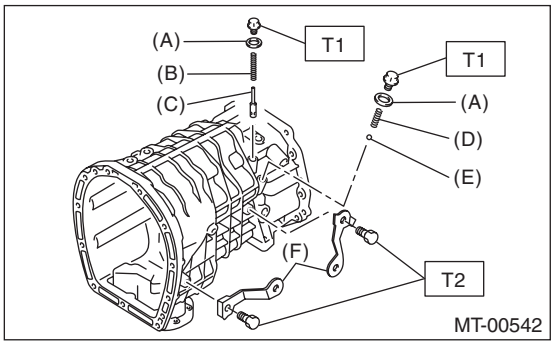

(A) O-ring
(B) Relief valve spring
(C) Relief valve
(D) Valve spring
(E) Ball
(F) Harness bracket

E: INSPECTION

1) If there is sludge on the oil pan magnet, use a waste cloth to wipe it off completely.
2) Inspect that the oil strainer is not clogged. If it is clogged, clean or replace the oil strainer.
3) Check that there is no damage on each part. Replace damaged parts with new parts.